# GARMIN G1000 ATTITUDE HEADING REFERENCE SYSTEM - REMOVAL/INSTALLATION

## 1. General

A. This section gives the maintenance practices procedures for the removal and installation of the G1000 Garmin GRS Attitude Heading Reference System (AHRS) LRUs shown below. For a general overview of the AHRS system refer to Garmin G1000 Attitude Heading Reference System - Description and Operation.

- GRS 77 and GRS 79 AHRS Unit (1 and 2)
- GRS 77 and GRS 79 ARHS Configuration Module (Unit 1 and 2)
- GMU 44/44B Magnetometer (Unit 1 and 2)

## 2. Tools and Equipment

A. Tools and Equipment

- None.

B. Special Consumables

- None.

C. Reference Material

- Chapter 6, Access Plates and Panels Identification - Description and Operation
- Chapter 20, Electrical Bonding - Maintenance Practices
- Chapter 25, Flight Compartment - Maintenance Practices
- Garmin G1000 Attitude Heading Reference System - Description and Operation
- Refer to Garmin G1000 Integrated Avionics System - Adjustment/Test
- Attitude Heading Reference System - Adjustment/Test.

## 3. Setup

A. Prepare the Airplane

(1) Put the BATTERY switch to the OFF position.

(2) Put the AVIONICS switches to the OFF position.

(3) Disconnect external electrical power from the airplane.

(4) Disengage the applicable circuit breaker(s) given in Table 401.

***Table 401. Circuit Breakers***

| LRU | Circuit Breaker Name | Circuit Breaker Location |
|---|---|---|
| AHRS Unit 1 | AHRS 1 | Avionics Circuit Breaker Panel |
| AHRS Unit 2 | AHRS 2 | Avionics Circuit Breaker Panel |
| GRS 77/79 AHRS Unit 1 Configuration Module | AHRS 1 | Avionics Circuit Breaker Panel |
| GRS 77/79 AHRS Unit 2 Configuration Module | AHRS 2 | Avionics Circuit Breaker Panel |
| GMU Unit 1 | AHRS 1 | Avionics Circuit Breaker Panel |
| GMU Unit 2 | AHRS 2 | Avionics Circuit Breaker Panel |

(5) For AHRS 1, remove the end cover from the copilot's avionics rack.

**NOTE: The copilot's avionics rack is found in front of the copilot's door under the instrument panel.**

(6) For AHRS 2 do the steps that follow:

(a) Remove the copilot's seat. Refer to Chapter 25, Flight Compartment - Maintenance Practices.

(b) Remove access panel 232BR. Refer to Chapter 6, Access Plates and Panels Identification.

## 4. AHRS 1 Unit Removal

**NOTE: If the mounting screws that attach the mounting rack to the airplane structure are loosened after post-calibration has been completed, the GRS 77/79 AHRS must be calibrated again. Refer to Attitude Heading Reference System (AHRS) - Adjustment/Test.**

A. Remove the AHRS 1 Unit (Refer to Figure 401).
   (1) Disconnect the electrical connector from the AHRS unit.
   (2) Loosen the thumbscrews/captive screws that attach the AHRS unit to the mounting tray.
   (3) Lift the unit out of the mounting tray.

**5. AHRS 1 Unit Installation**

A. Install the AHRS 1 Unit (Refer to Figure 401).

**NOTE: If a new AHRS unit is installed, the software must be loaded. Refer to Garmin G1000 Integrated Avionics System - Adjustment/Test.**

**NOTE: If the mounting screws that attach the mounting rack to the airplane structure are loosened after post-calibration has been completed, the GRS 77/79 AHRS must be calibrated again. Refer to Attitude Heading Reference System (AHRS) - Adjustment/Test.**

   (1) Put the AHRS unit in its correct position in the mounting tray.
   (2) Tighten the thumbscrews that attach the AHRS unit to the mounting tray.
      (a) For GRS 77, torque the thumbscrews to between 22 and 25 inch-pounds (2.48 and 2.82 N-m).
      (b) For GRS 79, torque the captive screws to between 15 and 20 inch pounds (1.70 and 2.26 N-m)
   (3) Connect the electrical connector to the AHRS unit.
   (4) Engage the applicable circuit breaker(s) given in Table 401.
   (5) Do the AHRS post-maintenance checks.

**6. AHRS 2 Unit Removal**

**NOTE: If the mounting screws that attach the mounting rack to the airplane structure are loosened after post-calibration has been completed, the GRS 77/79 AHRS must be calibrated again. Refer to Attitude Heading Reference System (AHRS) - Adjustment/Test.**

A. Remove the AHRS 2 Unit (Refer to Figure 401).
   (1) Disconnect the electrical connector from the AHRS unit.
   (2) Loosen the thumbscrews/captive screws that attach the AHRS unit to the mounting tray.
   (3) Lift the unit out of the mounting tray.

**7. AHRS 2 Unit Installation**

A. Install the AHRS 2 Unit (Refer to Figure 401).

**NOTE: If a new AHRS unit is installed, the software must be loaded. Refer to Garmin G1000 Integrated Avionics System - Adjustment/Test.**

**NOTE: If the mounting screws that attach the mounting rack to the airplane structure are loosened after post-calibration has been completed, the GRS 77/79 AHRS must be calibrated again. Refer to Attitude Heading Reference System (AHRS) - Adjustment/Test.**

   (1) Put the AHRS unit in its correct position in the mounting tray.
   (2) Tighten the thumbscrews/captive screws that attach the AHRS unit to the mounting tray.
      (a) For GRS 77, torque the thumbscrews to between 22 and 25 inch-pounds (2.48 and 2.82 N-m).
      (b) For GRS 79, torque the captive screws to between 15 and 20 inch pounds (1.70 and 2.26 N-m)
   (3) Connect the electrical connector to the AHRS unit.
   (4) Engage the applicable circuit breaker(s) given in Table 401.

**8. GRS 77/79 AHRS Configuration Module Removal**

A. Remove the Configuration Module (Refer to Figure 402).

**NOTE: The removal and installation of the configuration modules is typical for the pilot's and copilot's GRS 77/79 units.**

**NOTE: The configuration modules are installed in the electrical connectors of the GRS 77 units (PF300 / AHRS 1, PF301 / AHRS 2).**

**NOTE: The configuration modules are installed in the electrical connectors of the GRS 79 units (PF307 /**

**AHRS 1, PF315 / AHRS 2).**

(1) Get access to the applicable GRS 77/79 unit.

(2) Disconnect the applicable electrical connector. Refer to Cessna Model 208/208B Wiring Diagram Manual.

(3) Remove the screws from the electrical connector cover and remove the cover from the electrical connector.

(4) Disconnect the connector on the cable harness from the configuration module.

(5) Carefully remove the configuration module from the electrical connector.

**9. GRS 77/79 AHRS Configuration Module Installation**

A. Install the Configuration Module (Refer to Figure 401).

**NOTE: The removal and installation of the configuration modules is typical for the pilot's and copilot's air data computers.**

(1) Examine the connector pins on the cable harness for damage.

(2) Carefully put the configuration module in position in the electrical connector.

(3) Connect the connector on the cable harness to the configuration module.

(4) Put the electrical connector cover in position on the electrical connector.

(5) Install the screws to hold the electrical connector cover on the electrical connector.

(6) Connect the electrical to the applicable GRS 77/79 AHRS unit.

(7) Install the pilot's or copilot's GRS 77/79 AHRS unit.

(8) Engage the circuit breaker(s) given in Table 401.

**10. GMU 44/44B Magnetometer Removal**

A. Remove the GMU 44/44B Magnetometer (Refer to Figure 403).

**NOTE: The removal procedures for the left and right magnetometers are typical.**

**NOTE: Garmin GMU 44 and GMU44B utilize different part numbers for the mounting rack and electrical connector, make sure to use the correct parts for your application. Refer to the Model 208/208B Illustrated Parts Catalog and the Model 208/208B Wiring Diagram Manual for additional information.**

**CAUTION: Do not use magnetized tools or screws around the magnetometer. Use of magnetized tools or screws can cause an incorrect heading indication.**

(1) Remove the access plates, refer to 06-20-02, 523AB for left wing, refer to 06-20-02, 623AB for right wing) to get to the magnetometer. Refer to Chapter 6, Access/Inspection Plates - Description and Operation.

(2) Remove the screws that attach the magnetometer to the flux detector bracket.

(3) Disconnect the electrical connector.

**11. GMU 44/44B Magnetometer Installation**

A. Installation the GMU 44/44B Magnetometer (Refer to Figure 403).

**NOTE: The installation procedures for the left and right magnetometers are typical.**

**NOTE: If a new GMU 44 unit is installed, the software must be loaded, if a new GMU 44B unit is installed, utilize the Garmin NXi Intelligent LRU replacement feature. Refer to Chapter 34, Garmin G1000 Integrated Avionics System - Adjustment/Test section for additional information.**

(1) Make sure the electrical connector and connector pins have no damage.

(a) Replace the electrical connector or connector pins if applicable. Refer to the Model 208 Wiring Diagram Manual, the Garmin G1000 Caravan Line Maintenance Manual, and the Garmin GMU44B Installation Manual as required..

(2) Clean the mounting rack to obtain a Type I Electrical Bond to the aircraft structure, refer to Chapter 20, Electrical Bonding - Maintenance Practices.

(3) Connect the electrical connector.

(4) Attach the magnetometer to the flux detector bracket with the screws.

(a) Put the magnetometer in position on the flux detector bracket, temporarily aligned parallel to the longitudinal axis of the airplane.

(b) Make sure there is a

(5) Engage the circuit breakers given in Table 401.

**12. AHRS System Post-Maintenance Checks**

A. Do the AHRS Post-Maintenance Checks.

(1) Do an electrical bond check (Type I) between the AHRS unit and the airplane structure. Refer to Chapter 20, Electrical Bonding - Maintenance Practices.

(2) If a new LRU is installed, do the G1000 Baseline Software/Configuration Load. Refer to Garmin G1000 Integrated Avionics System - Adjustment/Test.

(3) If a new LRU is installed do the Magnetometer Calibration. Refer to the Attitude Heading Reference System (AHRS) - Adjustment/Test .

(4) Do a check to make sure the AHRS System and related Garmin components status is correct. Refer to Garmin G1000 Integrated Avionics System - Adjustment/Test G1000 Architecture Verification Check.

(5) Do the AHRS installation calibration. Refer to Attitude Heading Reference System (AHRS) - Adjustment/Test.

(a) If the mounting screws that attach the mounting rack to the airplane structure have been loosened after post-calibration has been completed, you must calibrate the AHRS unit again.

**13. Closeout**

A. Put the Airplane Back to its Initial Condition.

(1) Do the steps that follow as necessary:

(a) Install the end cover from the copilot's avionics rack.

(b) Install the access panel.

(c) Install the copilot's seat.

Figure 401 : Sheet 1 : Attitude Heading Reference System (AHRS) Installation

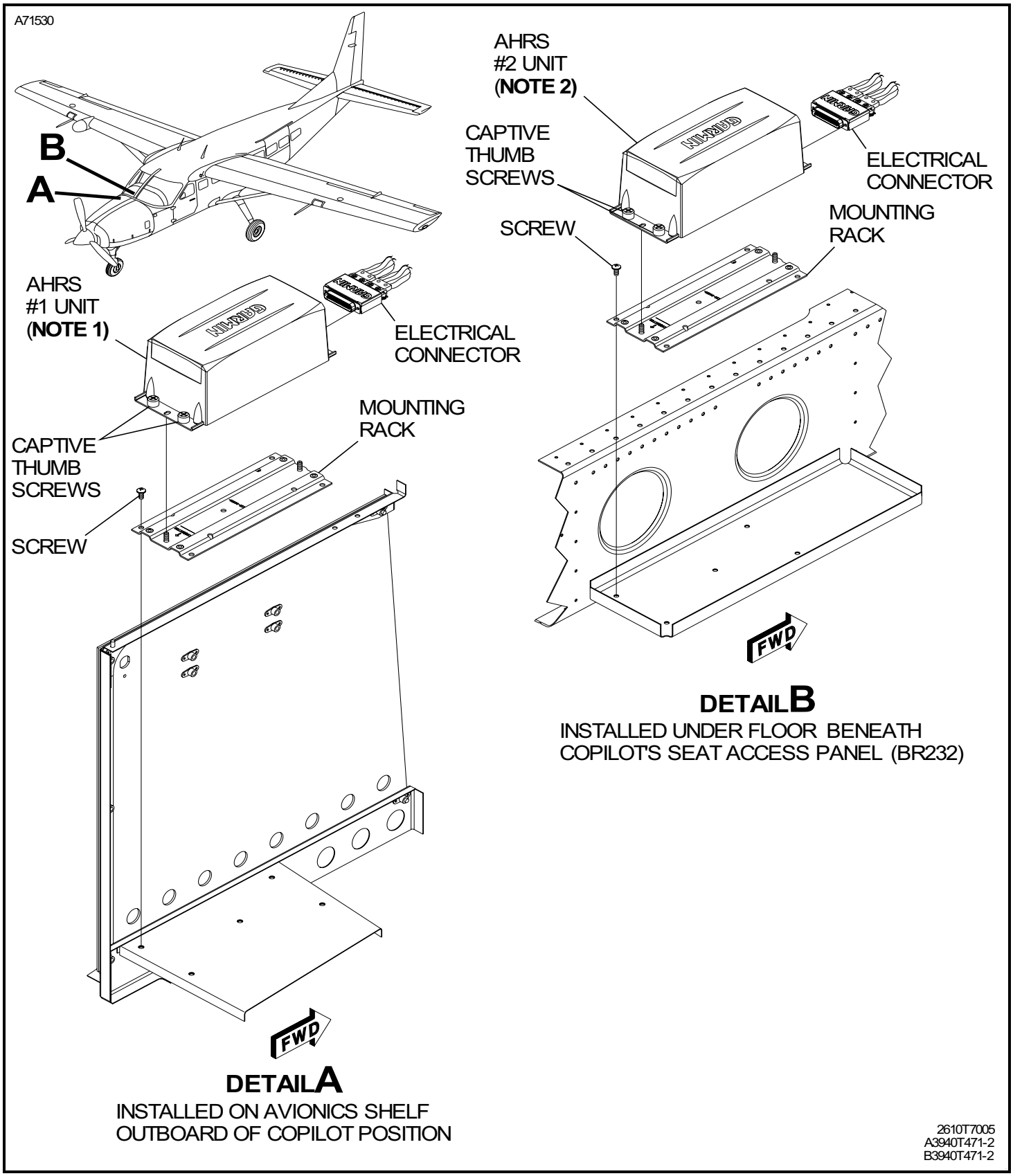

Figure 402 : Sheet 1 : GRS 77/79 AHRS Configuration Module

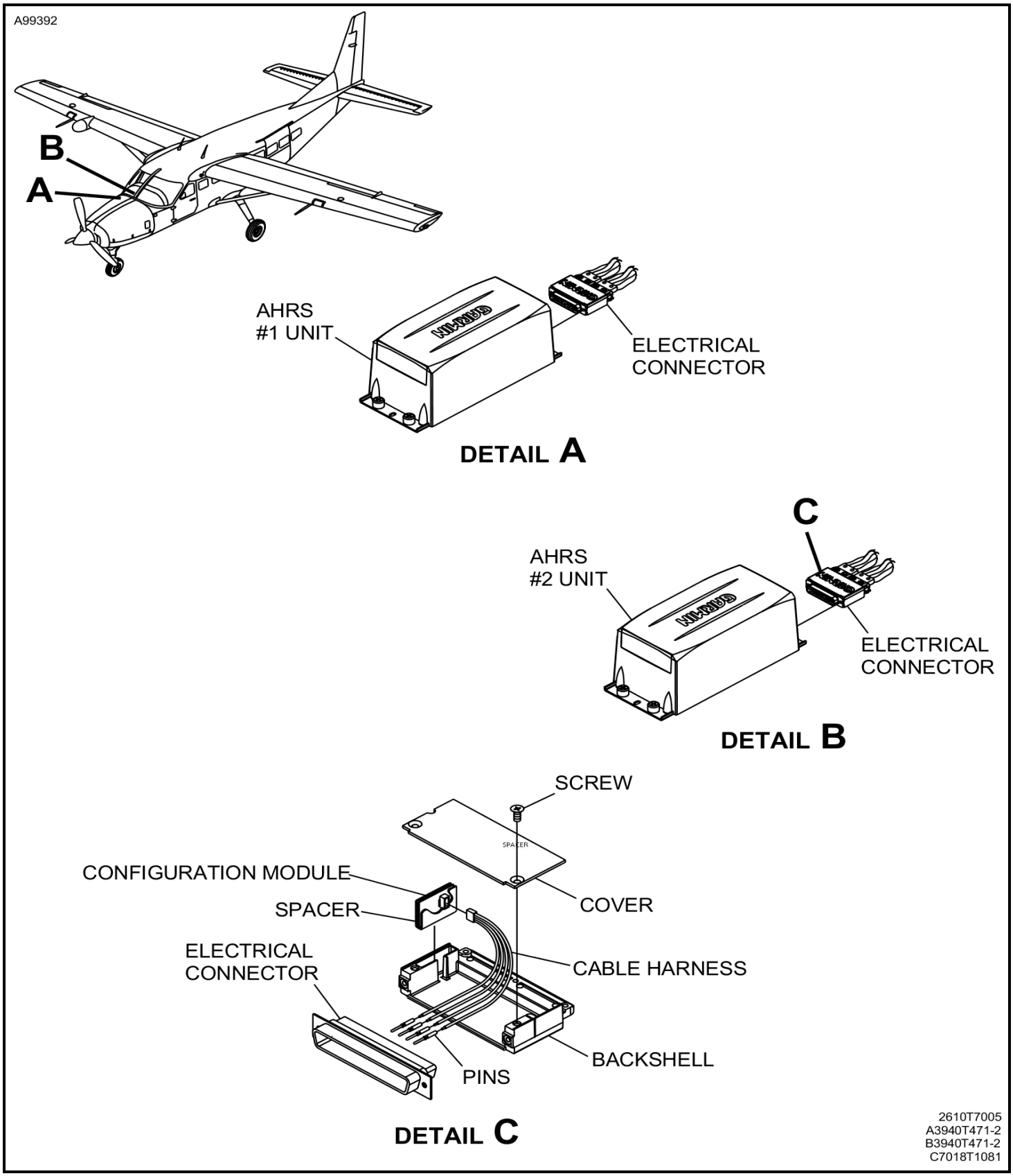

Figure 403 : Sheet 1 : Magnetometer Installation

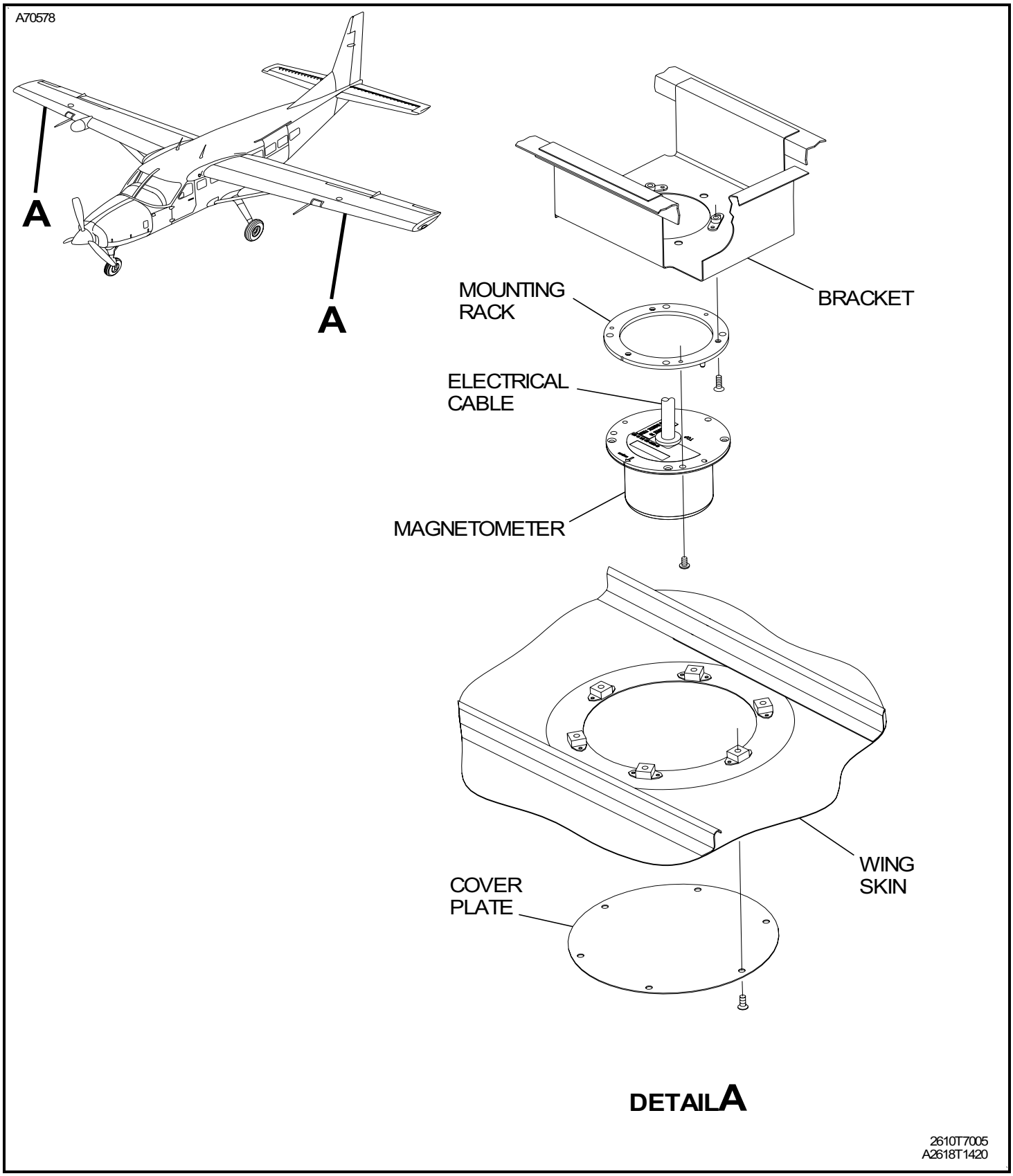

Figure 2 : Sheet 1 : Model 208 Floorboard Access Plates/Panels Identification

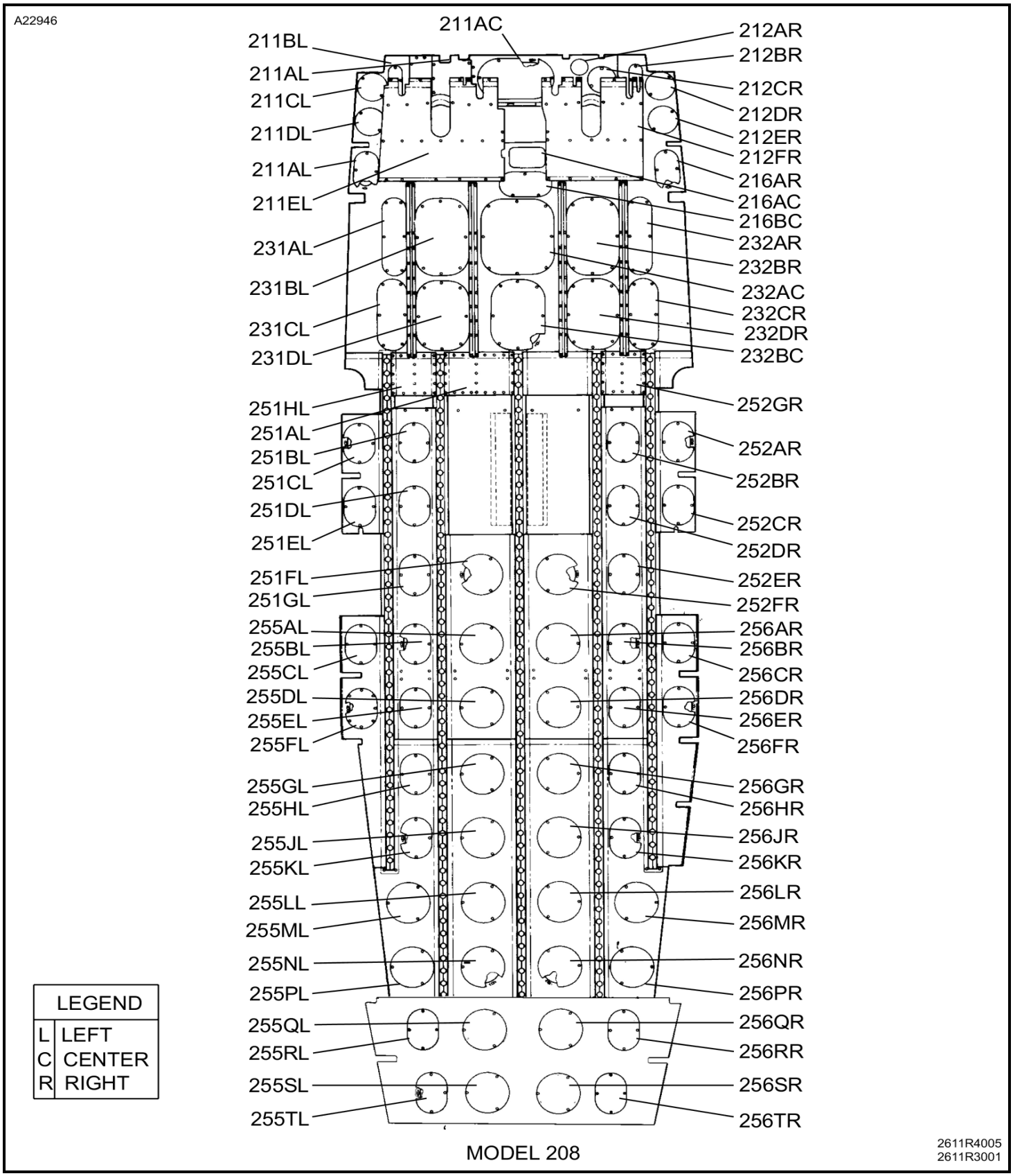

Figure 7 : Sheet 1 : Left Lower Wing Panels

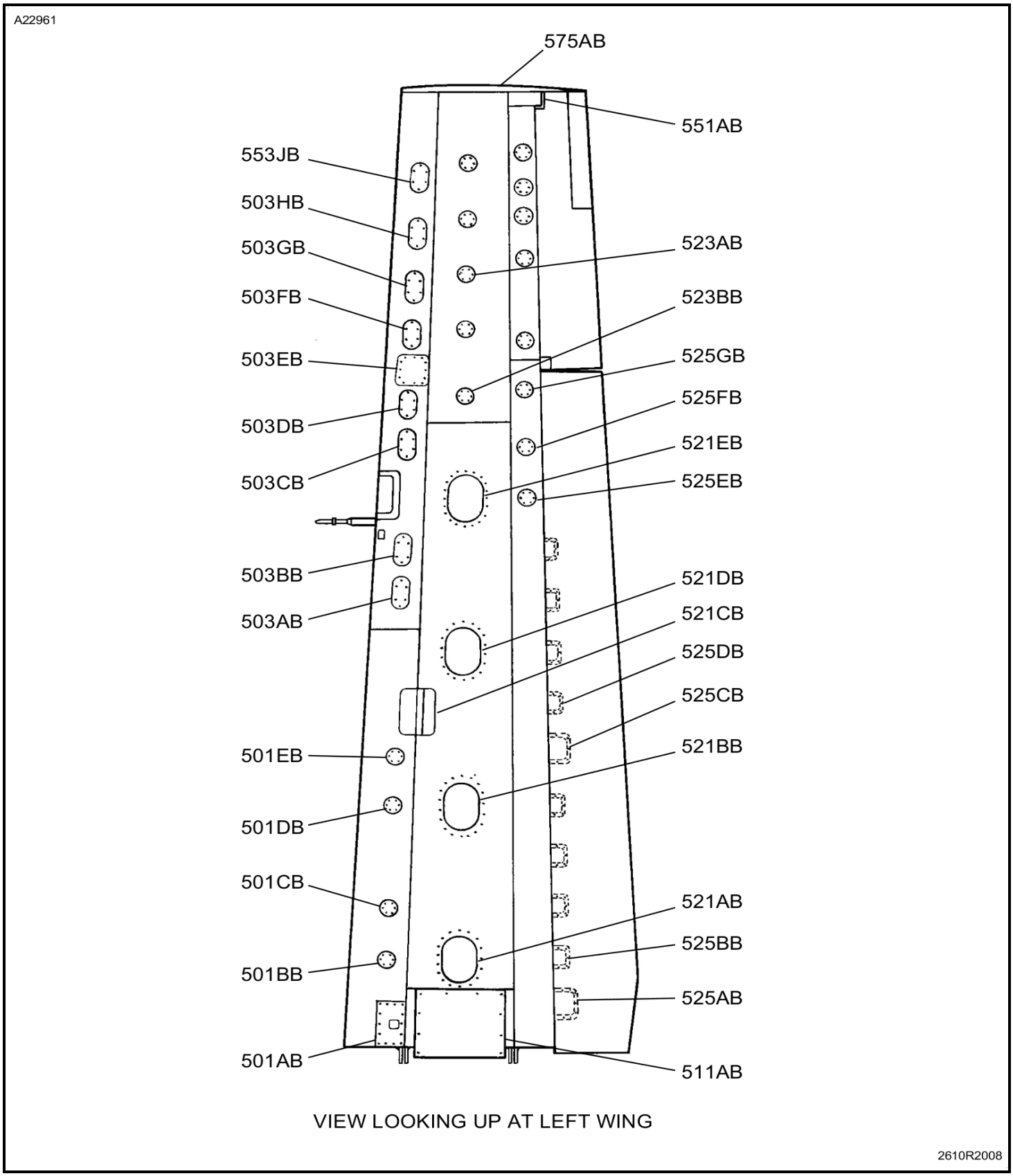

Figure 8 : Sheet 1 : Right Lower Wing Panels